HAND PALLET TRUCK

PM20S STAINLESS

AISI 316

Climax HANDLING EQUIPMENT

HANDLING EQUIPMENT

PM20S - AISI 316

TECHNICAL DETAILS

CAPACITY	Q	NOMINAL LOAD	kg	2000
ROLLERS		QTY/TYPE		4 / N
WHEELS				N

DIMENSIONS

FORK LENGTH		mm	1150
FORK WIDTH		mm	540
HEIGHT FROM THE FLOOR	MIN/MAX	mm	85 / 200
WEIGHT		kg	70

FRAME

WORKING CONDITION	°C	-10 to +40
PUMP		STAINLESS
FRAME		STAINLESS
TIE-ROD		STAINLESS
TIE BAR		STAINLESS
HANDLE		STAINLESS
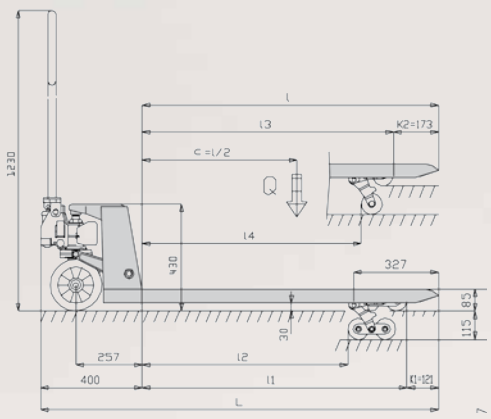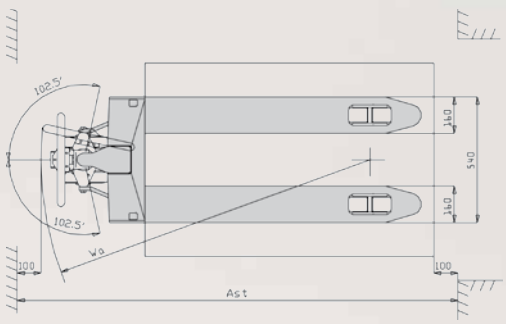
N=NYLON